Econ 142 – Exam 2 - ANSWER KEY **NAME:_____**
Spring 2010 **ID:_____**
Professor Spearot

I have neither given nor received unauthorized aid on this examination, nor have I concealed any similar misconduct by others.

*Signature*_____

Part 1 (2 points each – circle your answer for multiple choice)

1. The ratio of imported intermediate inputs to total inputs has _____ over the last 20 years
   a. stayed constant
   b. <u>doubled</u>
   c. tripled
   d. fallen
2. Outsourcing/Offshoring accounted for roughly ____ of lost jobs in 2004.
   a. 10%
   b. 25%
   c. <u>50%</u>
   d. 70%

Please mark whether the stated activity can be considered offshoring and/or outsourcing.

Situation	**Outsourcing?**	**Offshoring?**
Hospitals use US trained radiologists in India during nighttime hours in the US	X	X
McDonalds sets up and owns a call center in Colorado to handle US drive through orders		
GM uses offices in Europe and Korea to design a new car around the clock		X

Part 2: (5 points each)

1. Why might the US like the offshoring of jobs? Why might the US hate the offshoring of jobs?

   Like: Efficiency gains, lower prices
   Hate: Short term adjustment costs, lower wages.

2. Please list the four methods of foreign direct investment.

   Greenfield, M&A, Joint Venture, Licensing

3. Firms that engage in FDI have certain characteristics. Which of these is different for firms that invest in China?

   While large firms tend to invest, in China, these are small to medium size enterprises

4. Why did Ireland enjoy large inflows of FDI?

   Policy Measure + FDI Boom + Large and Opening market nearby.

Part 3 – 10 Points each

Consider the "Melitz"-type exporting/FDI model we discussed in class. A firm must decide whether to exit the market or operate, and if the latter, whether to be purely domestic, export to a foreign market, or produce directly in each market (foreign using FDI). The returns from exiting are zero. If the firm decides to operate in some manner, it must pay F_0 in overhead costs. If the firm also decides to export, it must pay F_X in exporting fixed costs. Finally, if the firm invests in the foreign country, it must pay another overhead cost F_0 and a fixed organizational cost δ.

The firm can earn $\prod_H(\alpha)$ in the domestic market . If the firm sells in the foreign market, potential profits are $\prod_F(\alpha)$. If the firm exports, the foreign government extracts a fraction τ of profits. The term α is firm level productivity, where each profit function is increasing in α.

1. Please graphically detail how firms sort into the four outcomes.

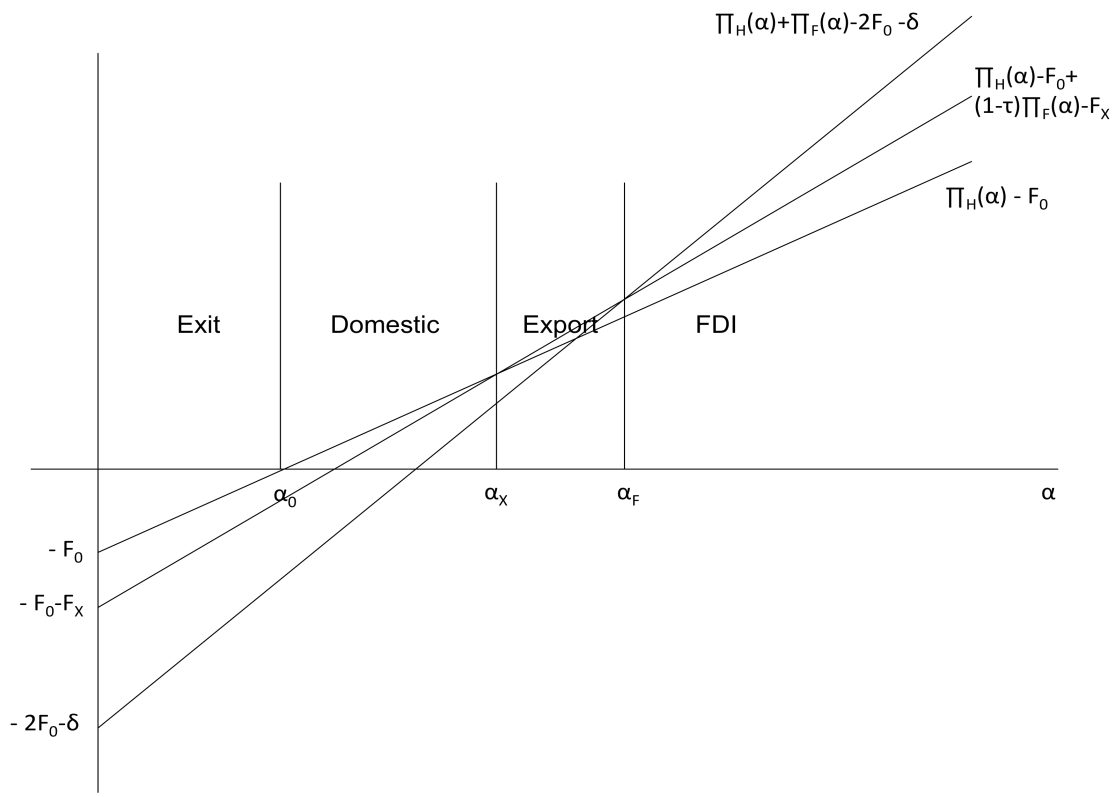

2. Suppose that the foreign market reduces their tariffs. Please detail graphically the direct effects of this tariff cut. Please also discuss the effect of the tariff cut on the prevalence and average productivity of each group of firms

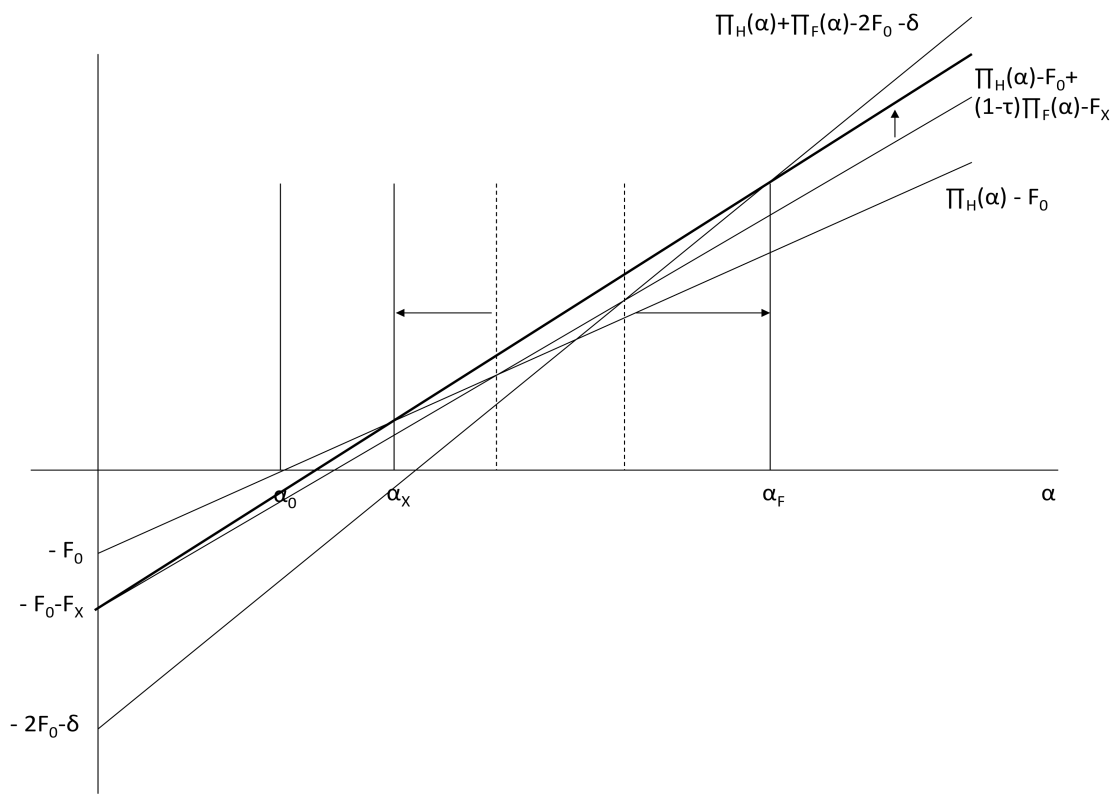

Share of exporters rises. Share of FDI falls. Share of Domestic firms fall. Share of exiting firms does not change.

Change in productivity of exporters is ambiguous. Productivity of FDI firms rises. Productivity of domestic firms falls. Productivity of exiting firms does not change.

Part 4 – 10 Points each

Consider the "Melitz"-type integration/outsourcing model we discussed in class. A firm must decide whether to exit the market or operate, and if the latter, whether to integrate or outsource the production of inputs. The returns from exiting are zero. If the firm decides to integrate the production of inputs, it must pay F_I in fixed costs, earning $\prod(\alpha)$ in the market. If the firm decides to outsource, it must pay F_O in fixed costs, and earns $(1-\delta)\prod(\alpha)$ in the market. Assume that δ is between zero and one.

1. Suppose that $F_O > F_I$. Please graphically detail how firms sort into the three outcomes.

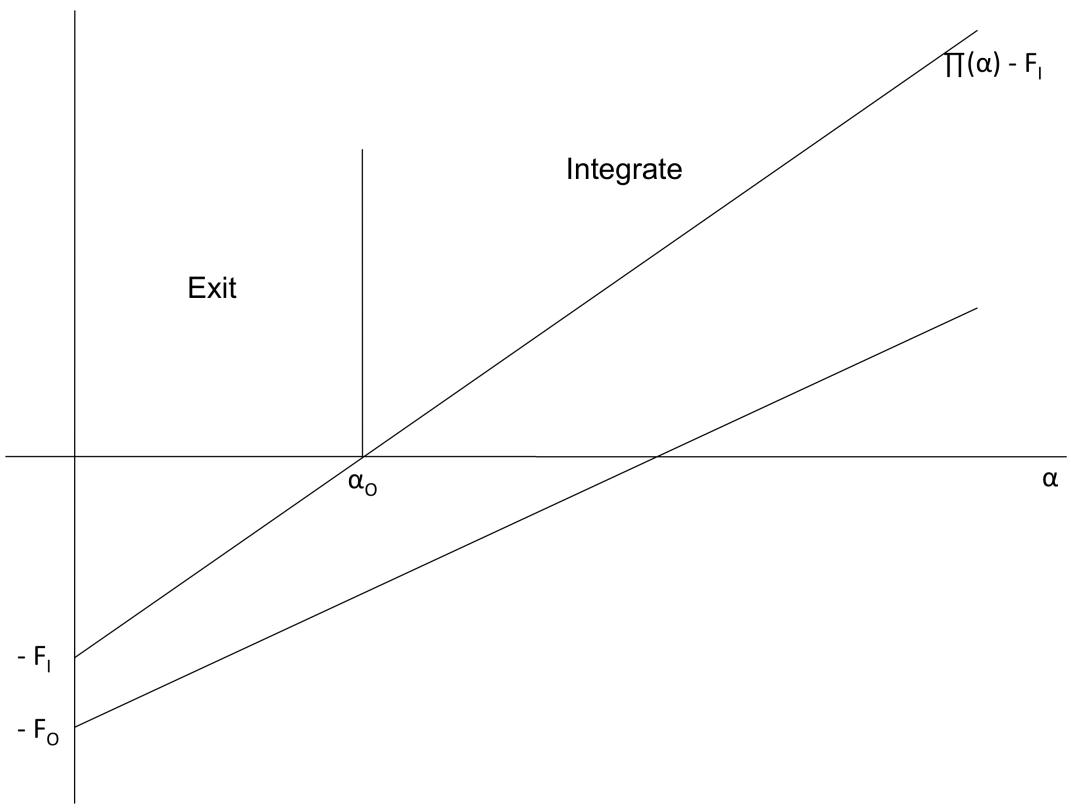

Outsourcing does not occur since the fixed costs of outsourcing are higher but the returns are lower.

2. Suppose that $F_O < F_I$. Please graphically detail how firms sort into the three outcomes.